IDEALAKKU

IDEALAKKU SPECIFICATION SHEET

IB-24-100H



LITHIUM BATTERY

Strong Advantages

- 3 Years Warranty
- Replacement of lead-acid battery
- Lighter weight and easier to handle
- Lithium iron phosphate is more stable
- Maximum service life of over 6000 cycles
- Long-lasting modular construction
- Screw opening, perfect crafted internal structure design

BMS

Battery Management System

The BMS monitors and controls the individual cells of a battery and protects them from damage, such as overload and overvoltage.

BLUETOOTH 4.0 INTEGRATED

Android

iOS

ELECTRIC HEATING FILM

- Some of the Idealakku lithium batteries are equipped with heating films. You can use the battery in temperatures as low as -35 degrees Celsius when acting the heating films
- The heating film is an IP material and the heating effect is even
- The heating films do not consume any power from the battery itself

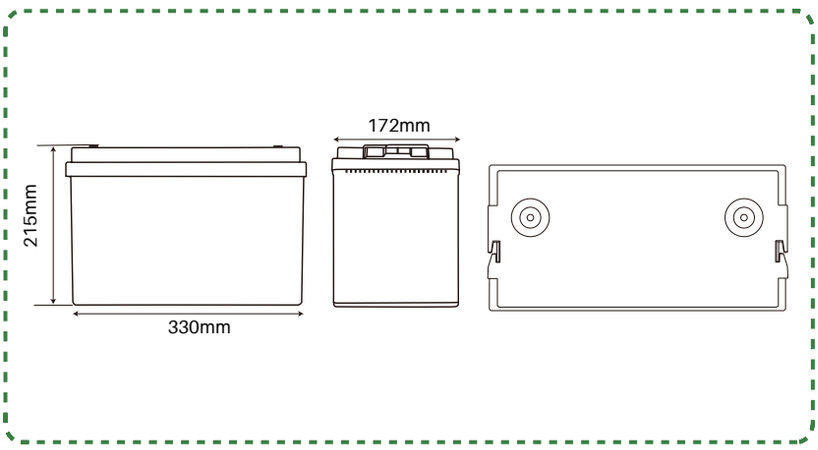

3 Jahre Garantie

IDEALAKKU SPECIFICATION SHEET

Specification

Items	Characteristics
Model	25.6V 100Ah/2560Wh
Replaces Gel-AGM battery	25.6V 200Ah
Cell type	Prismatic cell
Dimension with terminals (L x W x H)	502*186*243mm
Weight (No Accessories)	20,85Kg
Cycle Life	>6000@80%D.o.D
Internal Resistance	≤7 mΩ
Recommended Charge Voltage	14.6V
Float Charge Voltage(For standby use)	13.8±0.8V
Recommended Charge Current	30A
Max Charge Current	50A
Continuous Discharge Current	100A
Peak Discharge Cut-Off Current	300A (200~500ms)
Operating Voltage Range	20 - 29.2V
End of Discharge Voltage Range	20 - 22.4V
Terminal Type	M8
Ingress Protection Code	IP65
Charge Temperature	0~50°C
Discharge Temperature	-20~75°C
Storage Temperature	-5~35°C
Heater Operating Temperature	-35~5°C
Storage Condition	Charging the battery every 3 months
Series & Parallel Availability	Maximum 4 pcs in series and 4 pcs in parallel
Certifications	CE/UL/UN38.3 /MSDS /ROHS/ UN 3480/CLASS9

idealakku

info@idealakku.de www.idealakku.de +49 8121 7044990 Rebhuhnstraße 2a, 85586 Poing, Germany